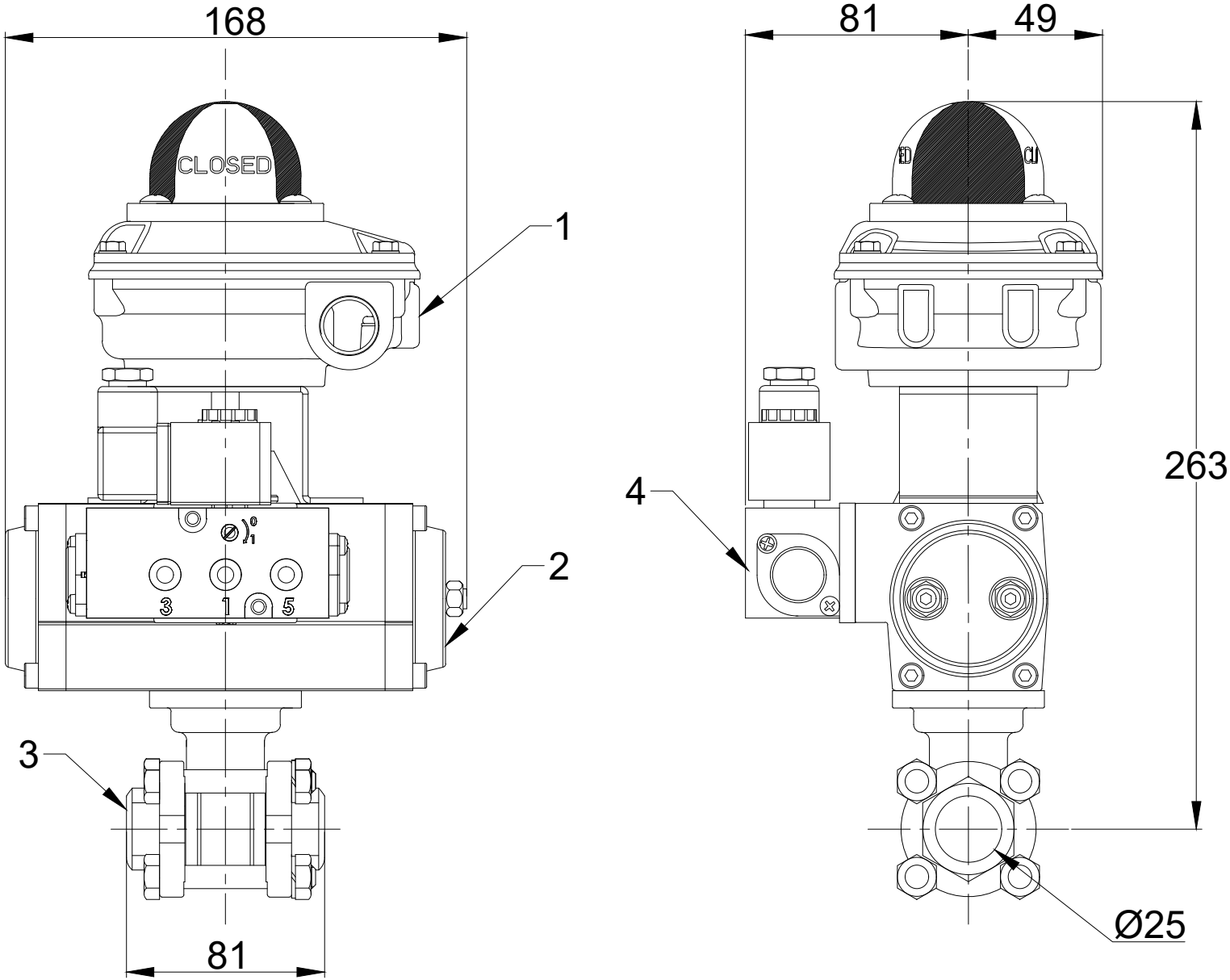

No	DESCRIPTION
9	
8	
7	
6	
5	
4	A-SOL-24VDC SOLENOID VALVE
3	T-3P316MP-025 DN25 BALL VALVE
2	ACROMATIC A-MT07 ACTUATOR
1	A-YT850LS SWITCH BOX

MATERIAL LIST

No	DESCRIPTION	DATE	DRAWN	CHK'D	APP'D
A	FOR REVIEW	07/02/23	JD	AM	AM

REVISIONS

CUSTOMER	XX
PROJECT	XX
REF NO	XX
P.O NO	XX
TAG NO	XX

THE VALVE COMPANY

GENERAL ARRANGEMENT DRAWING

DN25 3PC BSPP THREADED BALL VALVE WITH
DA ACTUATOR, SOV AND LSB

SCALE: NTS	DWG NO: TVC_DWG_0078	SHEET NO. 1 OF 001	REV. A